MODEL: CB

OPERATING INSTRUCTION AND PARTS MANUAL

■ **CB-3010** ■ **CB-3530** ■ **CB-4020**

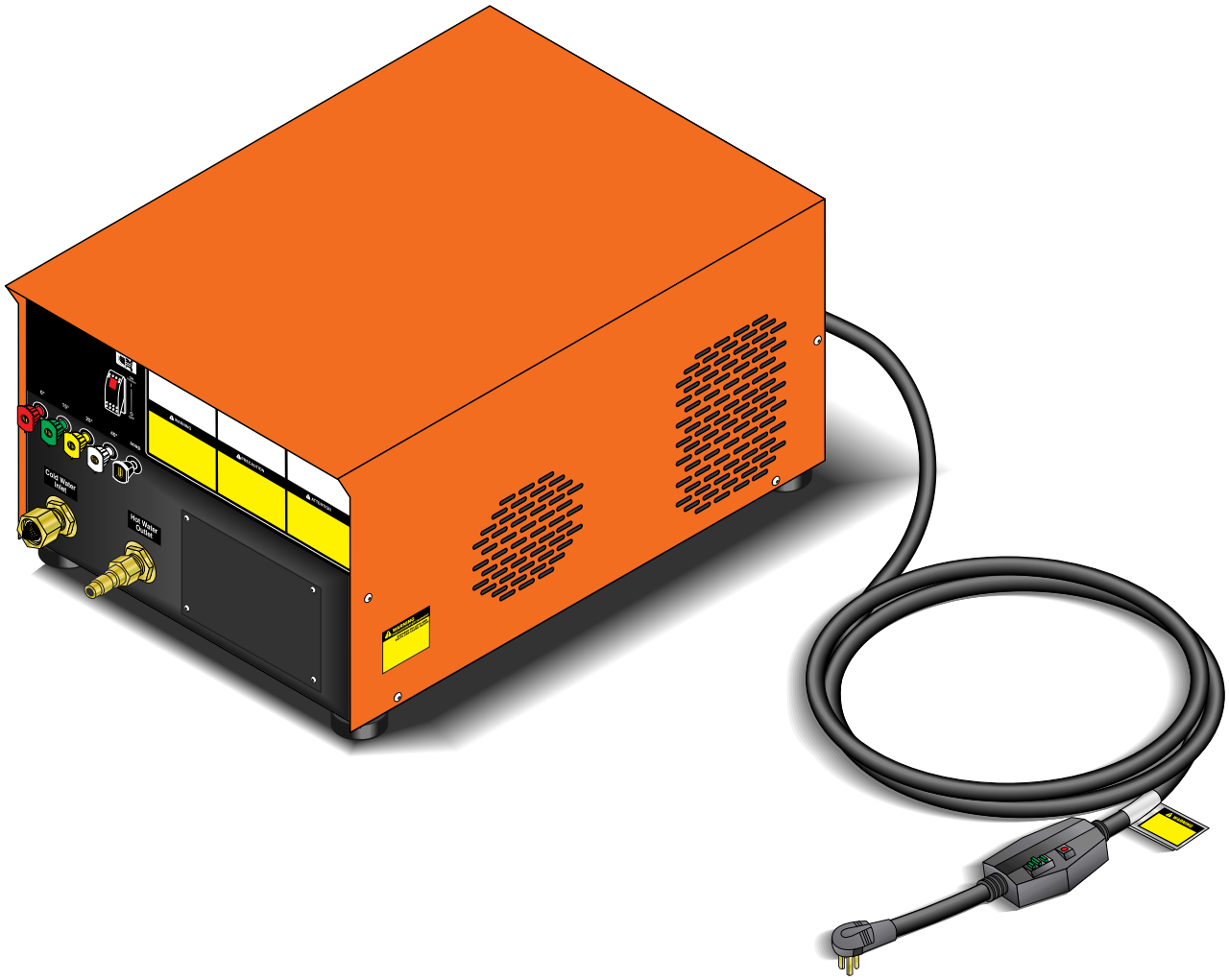

For technical assistance or the SHARK dealer nearest you, call 1-800-771-1881
or visit our website at www.shark-pw.com

#97-714

CONTENTS

Important Safety Information 4-5
Component Identification 6
Assembly Instructions 7
Operating Instructions 8
Applying Detergent and General Operating Techniques 9
Shut Down and Clean-Up 10
Storage 10
Troubleshooting 11-12
Preventative Maintenance 13
Oil Change Record 13
Exploded View 14-15
Exploded View Parts List 16-17
Pump Exploded View and Parts List 18
Hose & Spray Gun Assembly and Parts list 19
Specifications Page 20-21
Multi-Room Installation Guide 22
Warranty

Model Number _____

Serial Number _____

Date of Purchase _____

The model and serial numbers will be found on a decal attached to the pressure washer. You should record both serial number and date of purchase and keep in a safe place for future reference.

INTRODUCTION

Thank you for purchasing this Pressure Washer.

All information in this manual is based on the latest product information available at the time of printing.

Manufacturer reserves the right to make changes at any time without incurring any obligation.

Owner/User Responsibility:

The owner and/or user must have an understanding of the manufacturer's operating instructions and warnings before using this pressure washer. Warning information should be emphasized and understood. If the operator is not fluent in English, the manufacturer's instructions and warnings shall be read to and discussed with the operator in the operator's native language by the purchaser/owner, making sure that the operator comprehends its contents.

Owner and/or user must study and maintain for future reference the manufacturers' instructions.

This manual should be considered a permanent part of the machine and should remain with it if machine is resold.

When ordering parts, please specify model and serial number.

IMPORTANT SAFETY INFORMATION

CAUTION

READ OPERATOR'S MANUAL THOROUGHLY PRIOR TO USE.

CAUTION: To reduce the risk of injury, read operating instructions carefully before using.

1. Read the owner's manual thoroughly. Failure to follow instructions could cause malfunction of the machine and result in death, serious bodily injury and/or property damage.
2. Know how to stop the machine and bleed pressure quickly. Be thoroughly familiar with the controls.
3. Stay alert — watch what you are doing.
4. All installations must comply with local codes. Contact your electrician, plumber, utility company or the selling distributor for specific details.

   To comply with the National Electrical code (NFPA 70) and provide additional protection from risk of electric shock, these pressure washers are equipped with a UL approved ground fault circuit interrupter (GFCI) power cord.

WARNING

RISK OF EXPLOSION: DO NOT USE WITH FLAMMABLE LIQUIDS.

WARNING: Flammable liquids can create fumes which can ignite causing property damage or severe injury.

WARNING: Risk of explosion — do not spray flammable liquids. Risk of explosion — do not spray flammable liquids or operate in an explosive location.

WARNING

KEEP WATER SPRAY AWAY FROM ELECTRICAL WIRING.

WARNING: Keep water spray away from electrical wiring or fatal electric shock may result.

5. To protect the operator from electrical shock, the machine must be electrically grounded. It is the responsibility of the owner to connect this machine to an approved grounded receptacle of proper voltage and amperage ratings. Do not spray water on or near electrical components. Do not touch machine with wet hands or while standing in water. Always disconnect power before servicing.
6. Grip cleaning wand securely with both hands before starting. Failure to do this could result in injury from a whipping wand.

WARNING

HIGH PRESSURE STREAM CAN PIERCE SKIN AND TISSUES.

WARNING: High pressure stream of fluid that this equipment can produce can pierce skin and its underlying tissues, leading to serious injury and possible amputation.

7. High pressure developed by these machines will cause personal injury or equipment damage. Use caution when operating. Do not direct discharge stream at people, or severe injury or death will result.
8. Never make adjustments on machine while in operation.

WARNING

USE PROTECTIVE EYEWEAR WHEN OPERATING EQUIPMENT.

WARNING: High pressure spray can cause paint chips or other particles to become airborne and fly at high speeds.

9. Eye safety devices, hand and foot protection must be worn when using this equipment.
10. When the machine is working, do not cover or place in a closed space where ventilation is insufficient.
11. Protect from freezing.
12. Be certain all quick coupler fittings are secured before using pressure washer.
13. Do not allow acids, caustic or abrasive fluids to pass through the pump.

14. Inlet water must be no hotter then 190° and clean fresh water. It is recommended that inlet water temperatures not exceed 175° for pump longevity.
15. The best insurance against an accident is precaution and knowledge of the machine.
16. Manufacturer will not be liable for any changes made to our standard machines or any components not purchased from them.
17. To reduce the risk of injury, close supervision is necessary when a machine is used near children. Do not allow children to operate the pressure washer. **This machine must be attended during operation.**
18. Do not operate this machine when fatigued or under the influence of alcohol or drugs.
19. Keep operating area clear of all persons.
20. Do not overreach or stand on unstable support. Keep good footing and balance at all times.
21. Follow the maintenance instructions specified in the manual.

COMPONENT IDENTIFICATION

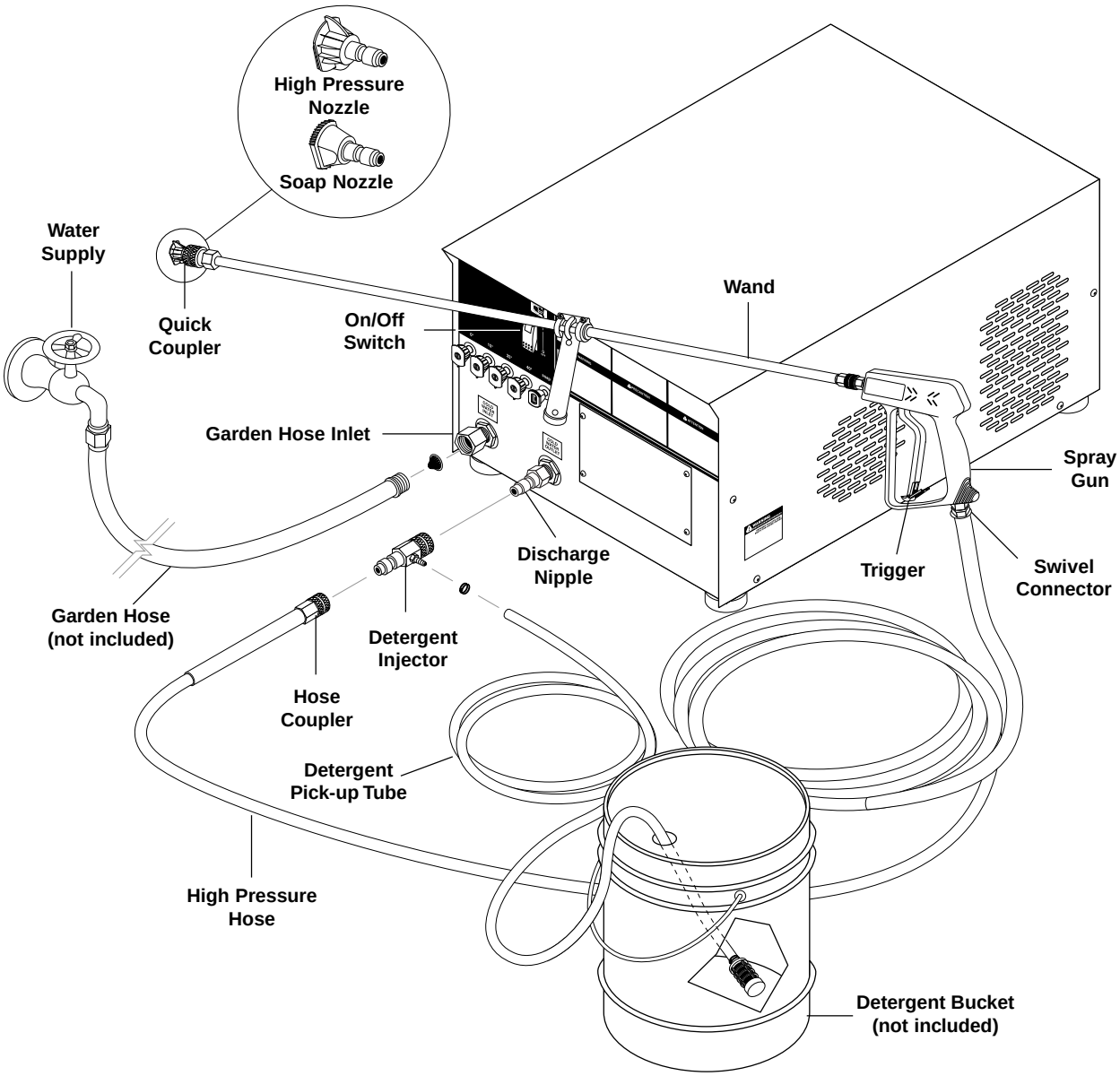

Detergent Injector - Allows you to siphon and mix detergents, when used with soap nozzle.

High Pressure Hose — Connect one end to water pump discharge nipple and the other end to spray gun.

Spray Gun — Controls the application of water and detergent onto cleaning surface with trigger device. Includes safety latch.

Wand — Must be connected to the spray gun.

Swivel Connector - Allows free range of movement to avoid coiling hoses.

Note: **If trigger on spray gun is released for more than 2 minutes, water will leak from pump protector valve. Warm water will discharge onto floor and cool water will allow the pump protector to seal. This system prevents internal pump damage.**

ASSEMBLY INSTRUCTIONS

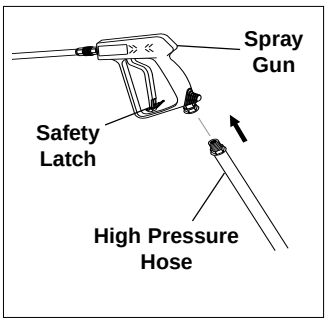

STEP 1: Attach the high pressure hose to the spray gun using teflon tape on hose threads. Use safety latch to prevent from opening.

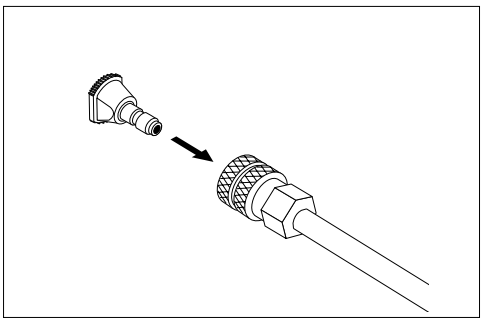

STEP 2: Insert nozzle into coupler.

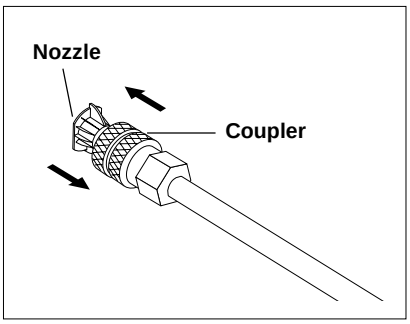

STEP 3: Release the coupler collar and push the nozzle until the collar clicks. Pull the nozzle to make sure it is seated properly.

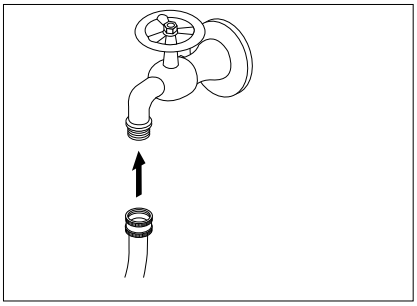

STEP 4: Connect garden hose to the cold water source.

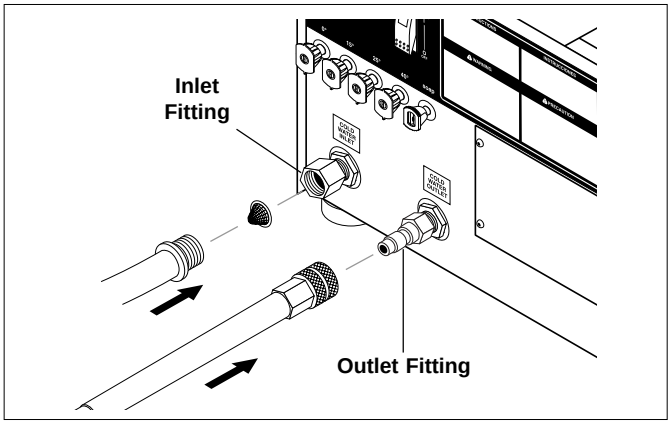

STEP 5: Connect the high pressure hose to the outlet discharge fitting. Push coupler collar forward until secure. Connect the garden hose to pump water inlet. Inspect inlets. ***CAUTION: Do not run the pump without water or pump damage will result.***

OPERATING INSTRUCTIONS

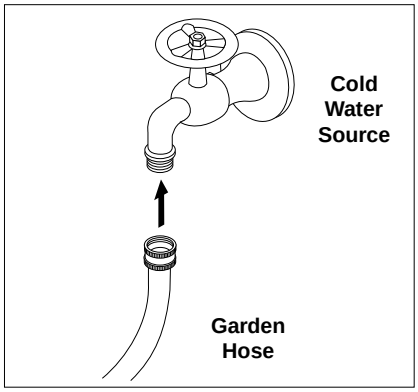

STEP 1: Connect garden hose to the cold water source and turn water on completely. Never use hot water.

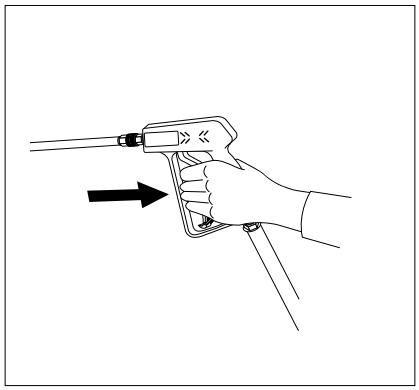

STEP 2: Trigger the spray gun to eliminate trapped air then wait for a steady flow of water to emerge from the spray nozzle.

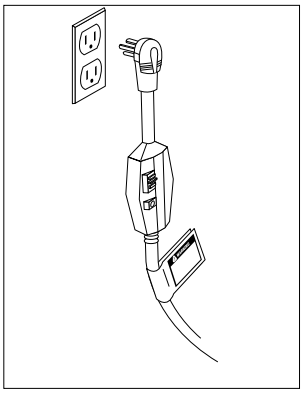

STEP 3: Connect to appropriate power supply. Push GFCI reset button.

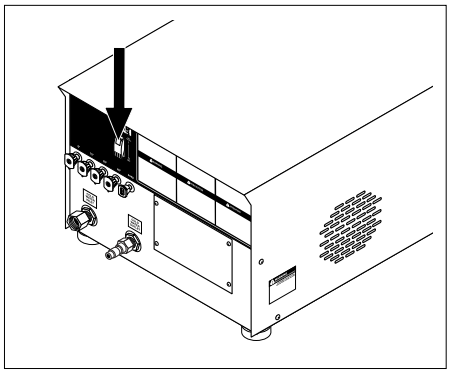

STEP 4: Turn machine on by pushing switch at front of machine.

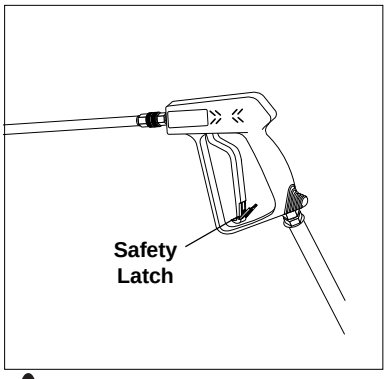

⚠ WARNING! Never replace nozzles without engaging the safety latch on the spray gun trigger.

NOZZLES

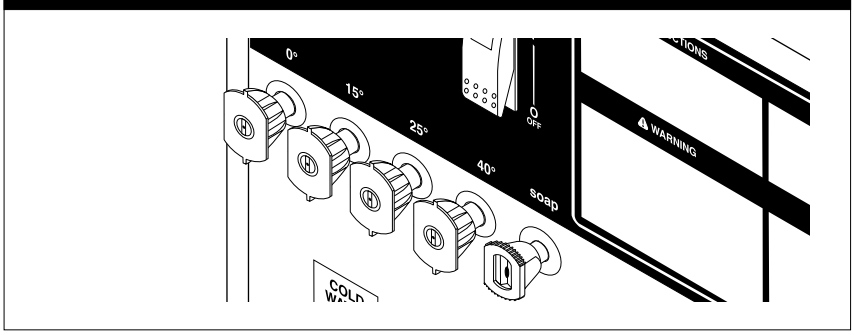

The five color-coded quick connect nozzles provide a wide array of spray widths from 0° to 45° and are easily accessible when placed in the convenient rubber nozzle holder, which is provided on the front of the machine.

N**OTE:** For a more gentle rinse, select the white 40° or green 25° nozzle. To scour the surface, select the yellow 15° or red 0° nozzle. To apply detergent select the black nozzle.

DETERGENTS AND GENERAL OPERATING TECHNIQUES

WARNING: Some detergents may be harmful if inhaled or ingested, causing severe nausea, fainting or poisoning. The harmful elements may cause property damage or severe injury.

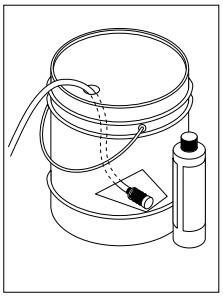

STEP 1: Use detergent designed specifically for pressure washers. Household detergents could damage the pump. Prepare detergent solution as required by the manufacturer. Fill a container with pressure washer detergent. Place the filter end of detergent suction tube into the detergent container.

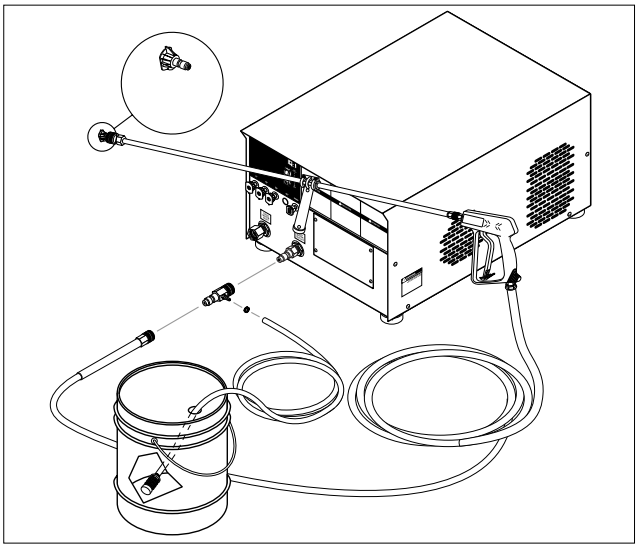

STEP 2: Apply safety latch to spray gun trigger. Secure black detergent nozzle into quick coupler. **NOTE:** Detergent cannot be applied using the Yellow nozzle.

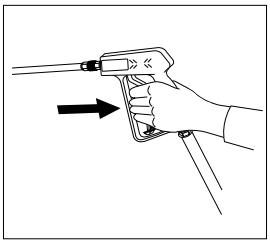

STEP 3: With the motor running, pull trigger to operate machine. Liquid detergent is drawn into the machine and mixed with water. Apply detergent to work area. Do not allow detergent to dry on surface.

IMPORTANT: You must flush the detergent injection system after each use by placing the suction tube into a bucket of clean water, then run the pressure washer in low pressure for 1-2 minutes.

THERMAL PUMP PROTECTION

If you run your pressure washer for 3-5 minutes without pressing the trigger on the spray gun, circulating water in the pump can reach high temperatures. When the water reaches this temperature, the pump protector engages and cools the pump by discharging the warm water onto the ground. This thermal device prevents internal damage to the pump.

CLEANING TIPS

Pre-rinse cleaning surface with fresh water. Place detergent suction tube directly into cleaning solution and apply to surface at low pressure (for best results, limit your work area to sections approximately 6 feet square and always apply detergent from bottom to top). Allow detergent to remain on surface 1-3 minutes. Do not allow detergent to dry on surface. If surface appears to be drying, simply wet down surface with fresh water. If needed, use brush to remove stubborn dirt. Rinse at high pressure from top to bottom in an even sweeping motion keeping the spray nozzle approximately 1 foot from cleaning surface. Use overlapping strokes as you clean and rinse any surface. For best surface cleaning action spray at a slight angle.

Recommendations:

- Before cleaning any surface, an inconspicuous area should be cleaned to test spray pattern and distance for maximum cleaning results.
- If painted surfaces are peeling or chipping, use extreme caution as pressure washer may remove the loose paint from the surface.
- Keep the spray nozzle a safe distance from the surface you plan to clean. High pressure wash a small area, then check the surface for damage. If no damage is found, continue to pressure washing.

CAUTION - Never use:

- Bleach, chlorine products and other corrosive chemicals
- Liquids containing solvents (i.e., paint thinners, gasoline, oils)
- Tri-sodium phosphate products
- Ammonia products
- Acid-based products

These chemicals will harm the machine and will damage the surface being cleaned.

RINSING

- It will take a few seconds for the detergent to clear. Apply safety latch to spray gun. Remove black soap nozzle from the quick coupler. Select and install the desired high pressure nozzle. **NOTE:** You can also stop detergent from flowing by simply removing detergent siphon tube from bottle.

SHUTTING DOWN AND CLEAN-UP

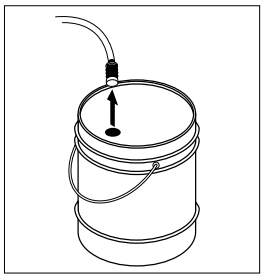

STEP 1: Remove detergent suction tube from soap container and insert into one gallon of fresh water. Use black soap nozzle with detergent injector. Pull trigger on spray gun and siphon water for one minute.

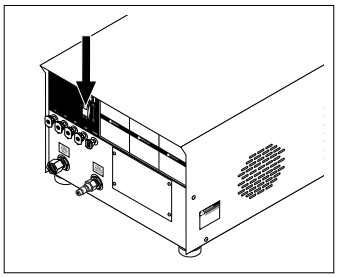

STEP 2: Turn off machine by pushing switch on front panel.

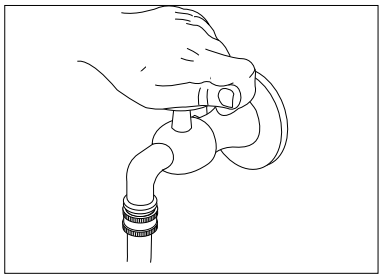

STEP 3: Turn off water supply.

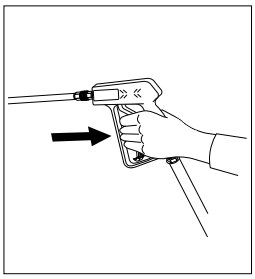

STEP 4: Press trigger to release water pressure.

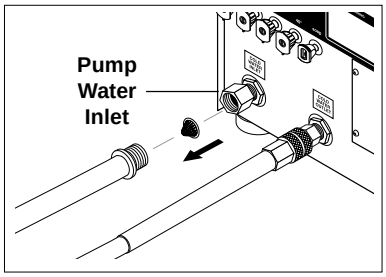

STEP 5: Disconnect the garden hose from the water inlet on the machine. Protect from freezing.

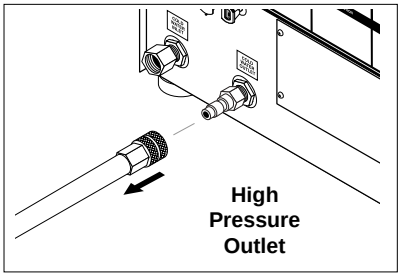

STEP 6: Disconnect the high pressure hose from high pressure outlet.

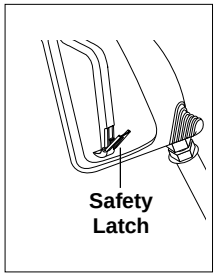

STEP 7: Engage the spray gun safety lock.

STORAGE

Pump Storage

CAUTION

CAUTION: Always store your pressure washer in a location where the temperature will not fall below 32° F (0° C). The pump in this machine is susceptible to permanent damage if frozen.

FREEZE DAMAGE IS NOT COVERED BY WARRANTY.

If you must store your pressure washer in a location where the temperature is below 32° F, you can minimize the chance of damage to your machine by draining your machine as follows:

1. Stop the pressure washer and detach supply hose and high pressure hose. Squeeze the trigger of the spray gun to drain all water from the wand and hose.
2. Restart pressure washer and let it run briefly (about 5 seconds) until water no longer discharges from the high pressure outlet.

TROUBLESHOOTING

PROBLEM	POSSIBLE CAUSE	SOLUTION
PUMP RUNNING NORMALLY BUT PRESSURE LOW ON INSTALLATION	Pump sucking air	Check water supply and possibility of air seepage.
	Check valves sticking	Check and clean or replace if necessary.
	Unloader valve seat faulty	Check and replace if necessary.
	Nozzle incorrectlly sized	Check and replace if necessary.
	Worn piston packing	Check and replace if necessary.
FLUCTUATING PRESSURE	Valves worn	Check and replace if necessary.
	Blockage in valve	Check and clean out if necessary.
	Pump sucking air	Check water supply connections.
	Worn piston packing	Check and replace if necessary.
	Insufficient water	Check filter and hose for breakage.
PRESSURE LOW AFTER PERIOD OF NORMAL USE	Nozzle worn	Check and replace if necessary.
	Suction or delivery valves worn	Check and replace if necessary.
	Suction or delivery valves blocked	Check and clean if necessary.
	Unloader valve seat worn	Check and replace if necessary.
	Unloader adjusted improperly	Call local Landa dealer.
	Worn piston packing	Check and replace if necessary.
	Bypass valve within unloader is obstructed or leaking	Remove and clean bypass cartridge.
PUMP NOISY	Air in suction line	Check water supply and connections on suction line.
	Broken or weak suction or delivery valve spring	Check and replace if necessary.
	Foreign matter in valves	Check and clean if necessary.
	Worn bearings	Check and replace if necessary.
	Excessive temperature of water	Reduce to below 140° F.

TROUBLESHOOTING

PROBLEM	POSSIBLE CAUSE	SOLUTION
PRESENCE OF WATER IN PUMP OIL	Oil seal worn	Check and replace if necessary.
	High humidity in air	Check and change oil twice as often.
	Piston packing worn	Check and replace if necessary.
WATER DRIPPING FROM UNDER PUMP	Piston packing worn	Check and replace if necessary.
	O-Ring plunger retainer worn	Check and replace if necessary.
OIL DRIPPING FROM PUMP	Oil seal worn	Check and replace if necessary.
EXCESSIVE VIBRATION IN HIGH PRESSURE HOSE	Irregular functioning of the pump valves	Check and replace if necessary.
	Obstruction in filter	Clean inlet filter.
MOTOR WILL NOT RUN	Motor overload	Push in the overload button located on the motor (single phase) or the overload button on the magnetic start switch (three phase).
	Stepdown transformer fuses	Check fuses and voltage. Replace if necessary.
	Coil of magnetic starter defective	Replace coil after the timer and unloader switch have been tested.
MACHINE WILL NOT TURN ON WHEN SWITCH IS PUSHED	Timer is defective	Join wires 15 and 16 together on timer. If works, replace timer.

PREVENTATIVE MAINTENANCE

PREVENTATIVE MAINTENANCE

This pressure washer was produced with the best available materials and quality craftsmanship. However, you as the owner, have certain responsibilities for the correct care of the equipment. Attention to regular preventative maintenance procedure will assist in preserving the performance of your equipment. Contact your dealer for maintenance. Regular preventative maintenance will add many hours to the life of your pressure washer. Perform maintenance more often under severe conditions.

MAINTENANCE SCHEDULE		
Pump Oil	Inspect	25 Hours or Weekly
	Change	Yearly
Check Valve Clearance		Yearly
Water Filter	Inspect	Every 6 Hours or Daily
	Clean	Yearly

OIL CHANGE RECORD

Check pump oil level before first use. Change pump oil after first 50 hours and every month or 500 hours thereafter.

Use SAE 30 weight oil.

Date Oil Changed Month/Day/Year	Estimated Operating Hours Since Last Oil Change	Date Oil Changed Month/Day/Year	Estimated Operating Hours Since Last Oil Change

EXPLODED VIEW

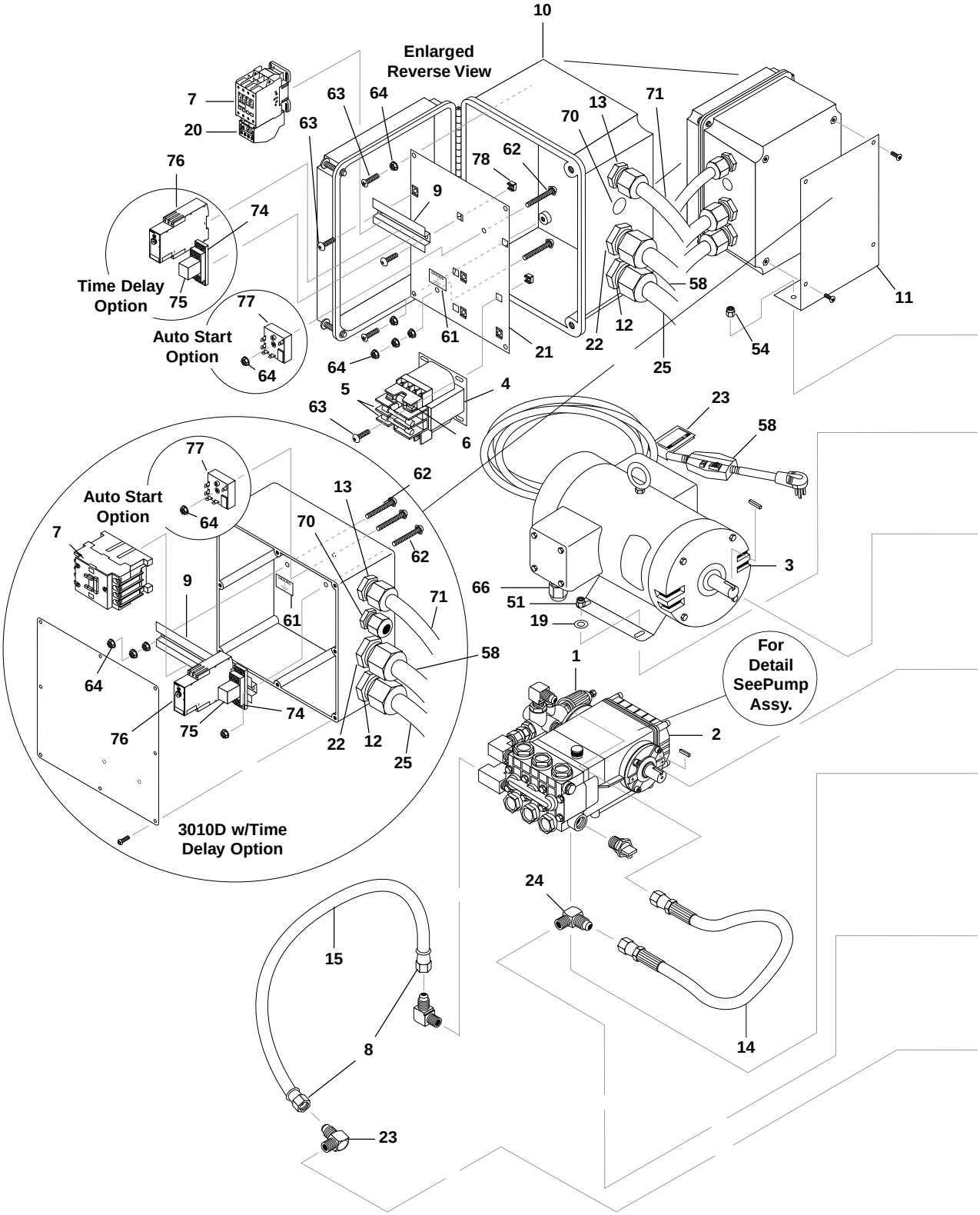

EXPLODED VIEW

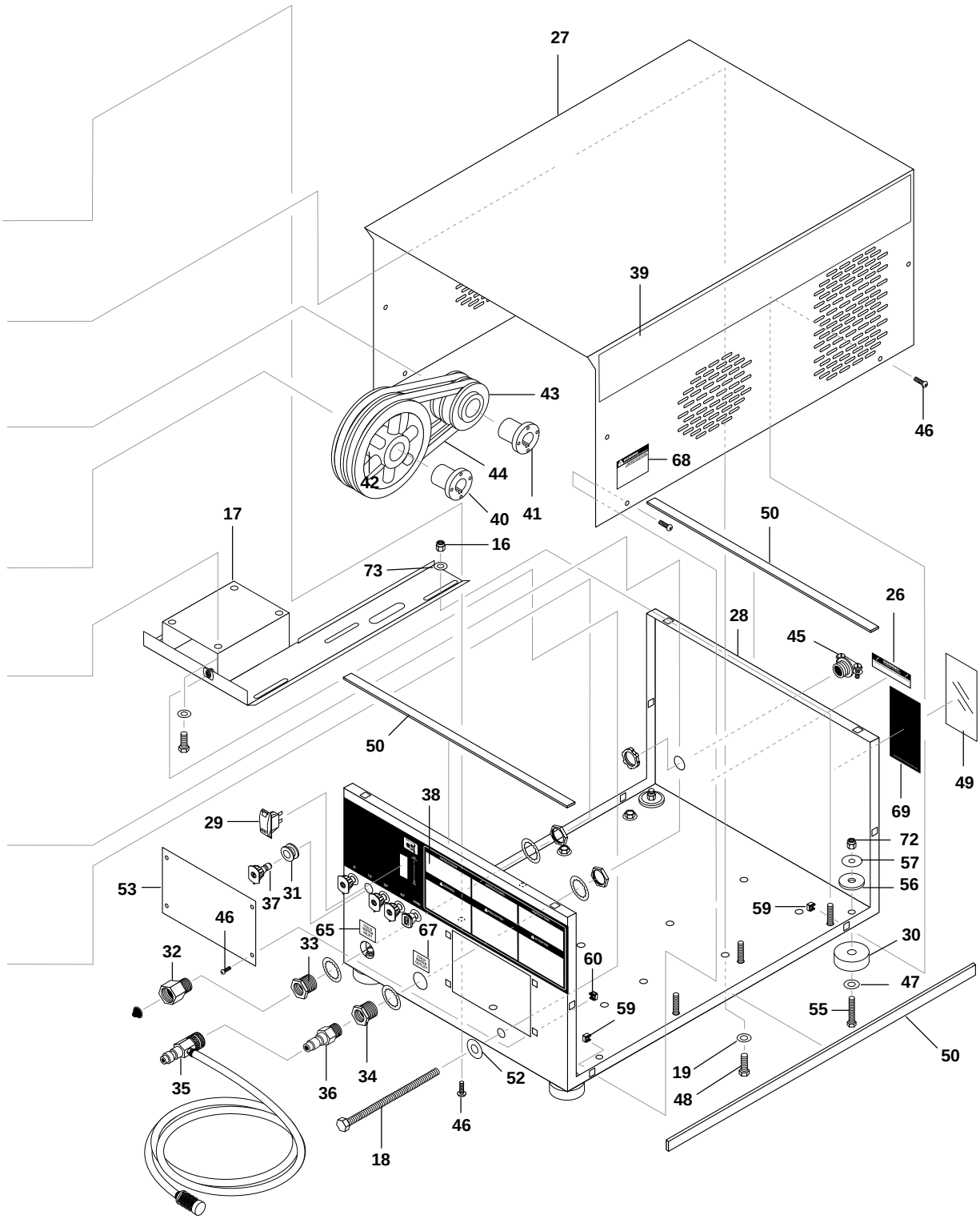

EXPLODED VIEW PARTS LIST

ITEM	PART NO.	DESCRIPTION	QTY
1	Unloader, See Specifications pages 20-21		
2	Pump, See Specifications pages 20-21		
3	Motor, See Specifications pages 20-21		
4	Transformer, See Specifications pages 20-21		
5	6-02294	Fuse, ATMR, 1 Amp, 600V (3530A, B; 4020A, B)	2
	6-02295	Fuse, 1/2 Amp, 600V (3530C, 4020C)	2
6	6-022970	Fuse, Paper, Buss FNM-1/2, 250V Midget (3530, 4020)	1
7	Contactor, See Specification pages 20-21		
8	2-1105	Swivel, 1/2" JIC Fem, Push-On	2
9	6-021595	Din Rail, 35 mm	4"
10	6-03909	Box, Plastic, 10" x 8" x 6" w/Lid (4020, 3530)	1
	6-03907	Box, Plastic 8" x 8" x 4", (3010)	1
11	95-07603907	Bracket, Electric Box Support	1
12	6-05153	Strain Relief, STRT, LQ Tite (3010)	1
	6-05181	▲ Locknut, 1/2" Conduit	1
	6-051595	Strain Relief, STRT, LQ Tite (3530A, B, C, G, H;4020A, B, C, G, H)	1
	6-05172	▲ Lock Nut, 3/4" (3530A, B, C, G, H;4020A, B, C, G, H)	1
13	6-05153	Strain Relief, STRT, Med.	1
	6-05181	Locknut, 1/2" Conduit	1
14	4-02047720	Hose, 3/8" x 20", 2 Wire, Pressure Loop (4020, 3530)	1
	4-02047725	Hose, 3/8" x 25", 2 Wire, Pressure Loop (3010)	1
15	4-02110000	Hose, 1/2" Push-On	1 ft.
16	90-2001	Nut, 5/16" ESNA	4
17	95-0710375546	Slider, Pump	1
18	90-1027461	Bolt, 1/2" x 8"	1
19	90-4001	Washer, 5/16", Flat, SAE (3010)	4
	90-4002	Washer, 3/8" SAE, Flat (3530, 4020)	4
20	Overload, See Specifications Pages 20-21		
21	95-07290068	Standoff, Electrical Box (3530, 4020)	1
22	6-051595	Strain Relief, 3/4" Strt, LQ Tite (3530B, C, H;4020 A, B, C, G, H)	1
	6-05172	▲ Lock-Nut, 3/4" (3530B, C, H; 4020A, B, C, G, H)	1
	6-05153	Strain Relief, Strt, LQ Tite (3010)	1

ITEM	PART NO.	DESCRIPTION	QTY
22	6-05181	▲ Lock Nut, 1/2" Conduit (3010)	1
	6-05170	Strain Relief, 3/4" (3530A, G)	1
	6-05172	▲ Lock-Nut, 3/4" (3530A, G)	1
23	2-08018	Label, Warn Service Cord	1
24	2-0053	Elbow, 1/2" JIC x 3/8" 90°	1
25	6-0108	Cord, Serv, SEO, 10/3 Coleman, Motor (4020A,G)	3.33 ft.
	6-0109	Cord Service, 10/4, Motor (3530H)	3.33 ft.
	6-01041	Cord, Service, 12/3, Motor (3010D)	4.25 ft.
	6-0102	Cord, Service, 8/3, Motor (3530A,G)	3.33 ft.
	6-0105	Cord Service, 12/4, Motor (4020B,C,H;3530B,C)	3.33 ft.
26	10-08021	Label, Disconnect Power Supply	1
27	95-07102129	Cover, Cabinet, Cold Water	1
28	95-07102122	Base Cabinet, Cold Water, Wrinkle Black	1
29	6-020240	Switch, Rocker, Carling w/Green Lens	1
	6-020241	Switch, Rocker, Carling Red (Time-Delay Shutdown Option)	1
30	2-01041	Pad, Soft Rubber, Duro 50	4
31	2-0103	Grommet, Rubber (Nozzle Holder)	5
32	2-10942	Swivel, 1/2" MP x 3/4" GHF w/strainer	1
33	2-11041	Connector, 1/2" Anchor	1
34	2-11039	Connector, 3/8" Anchor	1
35	4-011184	Downstream Injector Assembly, Non-Adj.	1
36	2-2007	Nipple, 3/8" x 3/8" NPT ST Male	1
37	4-12806000	Nozzle, 0006, Red (4020)	1
	4-12806015	Nozzle, 1506, Yellow (4020)	1
	4-12806025	Nozzle, 2506, Green (4020)	1
	4-12806040	Nozzle, 4006, White (4020)	1
	4-12804000	Nozzle, 0004, Red (3530)	1
	4-12804015	Nozzle, 1504, Yellow (3530)	1
	4-12804025	Nozzle, 2504, Green (3530)	1
	4-12804040	Nozzle, 4004, White (3530)	1
	4-12805500	Nozzle, 0005.5, Red (3010)	1
	4-12805515	Nozzle, 1505.5, Yellow (3010)	1
	4-12805525	Nozzle, 2505.5, Green (3010)	1
	4-12805540	Nozzle, 4005.5, White (3010)	1

EXPLODED VIEW PARTS LIST

ITEM	PART NO.	DESCRIPTION	QTY
38	11-0308	Label, Control Panel (CB Models)	1
39	11-0601	Label, Stripe, 29” (CB)	2
40	Bushing, See Specifications pages 20-21		
41	Bushing, See Specifications pages 20-21		
42	Pump Pulley, See Specifications pages 20-21		
43	Motor Pulley, See Specifications pages 20-21		
44	Belt, See Specifications pages 20-21		
45	6-05171	Strain Relief, 1"	1
46	90-1995	Screw, 1/4" x 1/2", BH SOC CS	14
47	90-40125	Washer, 3/8" x 1" Steel	4
48	90-1007	Bolt, 5/16” x 1 NC (3010)	4
	90-1016	Bolt, 3/8” x 1” NC, HH (3530, 4020)	4
49	10-9999	Label, Clear Lexan, 2-1/4" x 4-1/2"	1
50	2-01107	Weather Stripping	7 ft.
51	90-2002	Nut, 3/8" ESNA, NC (3530, 4020)	4
	90-2001	Nut, 5/16", ESNA, NC (3010)	4
52	90-3096	Washer, 1/2” Flat	1
53	95-07102289	Cover, Access Hole	1
54	90-2000	Nut, 1/4", ESNA NC	2
55	90-1018	Bolt, 3/8" x 1-1/2", NC HH	4
56	2-0108	Bumper Pad, Engine	4
57	90-4007	Washer, 3/8" x 1-1/2" Fender	4
58	6-01060	GFCI, 120V 20A w/36' 12-3 Cord (3010D)	1
	6-01059	GFCI, 240V 1Ph, 30A, 36' 10-3 Cord (4020A,G)	1
	6-010690	GFCI 240V 1Ph 40A, 36' 8-3 Cord (3530A,G)	1
	6-0105	Cord, Serv, SEO 12/4 (4020B,C,H;3530B,C)	10 ft.
	6-0109	Cord, Service, 10/4 (3530H)	10 ft.

ITEM	PART NO.	DESCRIPTION	QTY
59	90-20231	Nut, Cage, 1/4" x 12 Gauge	8
60	2-0114	Nut, 1/4" Square Head Grommet, Nylon	4
61	11-1042	Label, Ground	1
62	90-1994	Screw, 10/32" x 1-1/4" RH, SL (3530, 4020)	1
		(3010)	2
63	90-1991	Screw, 10/32" x 1/2" BHSOC (3530, 4020)	11
64	90-017	Nut, 10/32" KEPS (3010)	4
		(3530, 4020)	10
65	10-09003	Label, Cold Water Inlet, HS	1
66	6-051532	Strain Relief, 3/4", LQ Tite (3010)	1
	6-051595	Strain Relief, STRT, LQ Tite (3530B,C;4020A,B,C,G,H)	1
	6-05181B	▲ Locknut, 3/4” (3010; 3530B,C; 4020A,B,C,G,H)	1
	6-051700	Strain Relief, 1” (3530A,G,H)	1
	6-05182	▲ Locknut, 1” (3530A,G,H)	1
67	10-09002	Label, Cold Water Outlet	1
68	10-02028	Label, Warning, Exposed Pulleys	1
69	10-08016	Label, Intended for Indoor Use	1
70	6-05152	Strain Relief, Small, LQ Tite (Time Delay/Auto-Start Option)	1
	6-05181	▲ Lock-Nut, 1/2” Conduit (Time Delay/Auto-Start Option)	1
71	6-0101	Cord, Service, SEO, 16/3	2.5 ft.
	6-01011	Cord, Service, SEO 16/4 (Time Delay Shutdown Option)	2.5 ft.
72	90-2002	Nut, 3/8” ESNA	4
73	90-4001	Washer, 5/16” Flat	4
74	6-03541	Base Relay (Time Delay Shutdown Option)	1
75	6-03621	Relay (Time Delay Shutdown Option)	1
76	6-03700	Timer, Multi-Function, 24V-120/240V (Time Delay Shutdown Option)	1
77	6-036880	Timer, Solid State, 120V, 5-60 Mins, Adjustable (Auto Start/Stop Option)	1
78	90-2018	Nut, Cage, 10/32” x 16 Gauge (3530, 4020)	6

▲ Not Shown

PUMP EXPLODED VIEW

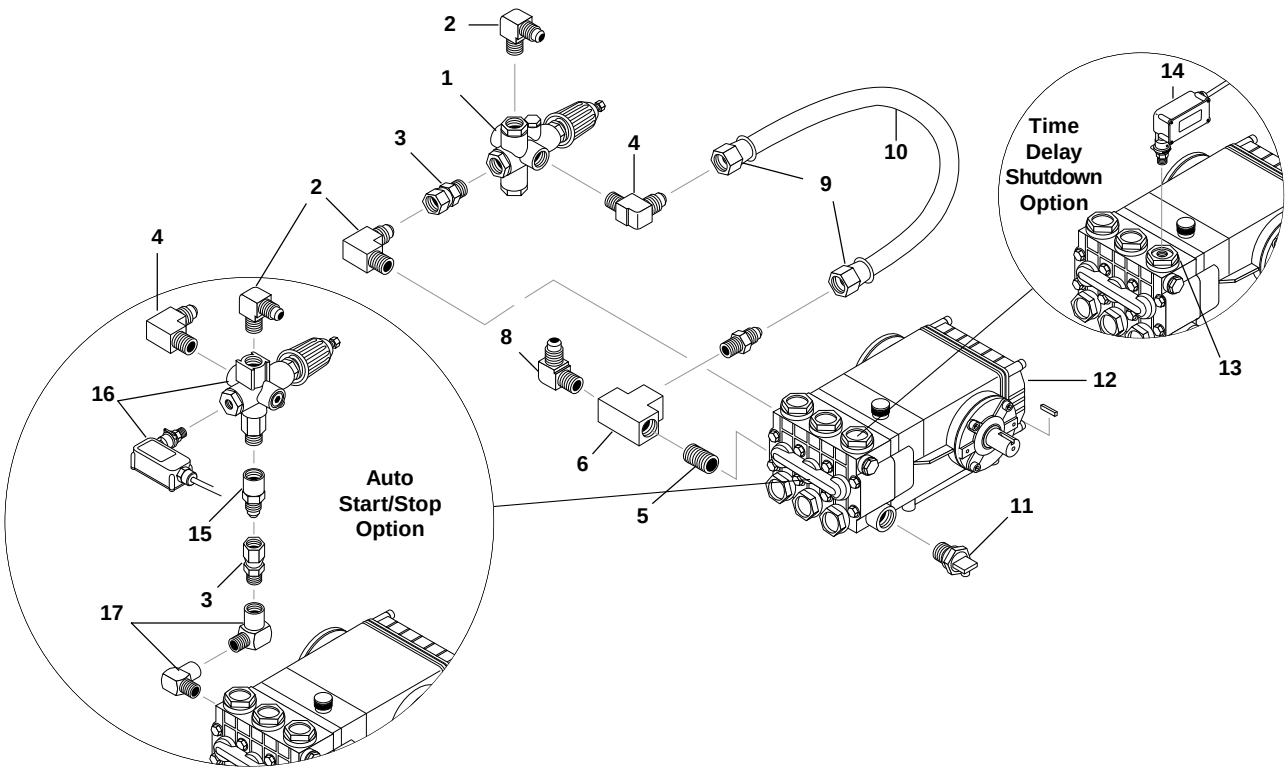

PUMP EXPLODED VIEW PARTS LIST

ITEM	PART NO.	DESCRIPTION	QTY
1	Unloader, See Specifications Pages 20-21		
2	2-0053	Elbow, 1/2" JIC, 3/8", 90° (Auto Start/Stop Option)	2 1
3	2-0079	Swivel, 1/2" JIC x 3/8" Male	1
4	2-1060	Elbow, 1/2 "JIC x 3/8"	1
5	2-1006	Nipple, 1/2" Close	1
6	2-1032	Tee, 1/2" Female Pipe	1
7	2-1053	Nipple, 1/2" JIC x1/2" MPT Pipe	1

ITEM	PART NO.	DESCRIPTION	QTY
8	2-1062	Elbow, 1/2" JIC x 1/2", 90°	1
9	2-1105	Swivel Push-On, 1/2" JIC Female	2
10	4-02110000	Hose, 1/2" Push-On	18"
11	2-3008150	Protector, Pump, 1/2", 190°	1
12	Pump, See Specifications pages 20-21		
13	70-460146	Cap, Valve w/1/4" Gauge Port (Time Delay Shutdown Option)	1
14	6-021720	Switch, Pressure, N/O, 1/4" NP (Time Delay Shutdown Option)	1
15	2-00510	Nipple, 1/2" JIC x 3/8" Female (Auto Start/Stop Option)	1
16	5-3027	Unloader, PA 8 GPM@3650 PSI, VB8, w/Switch (Auto Start/Stop Option)	1
17	2-0031	Elbow, 3/8" Street (Auto Start/Stop Option)	2

HOSE & SPRAY GUN ASSEMBLY

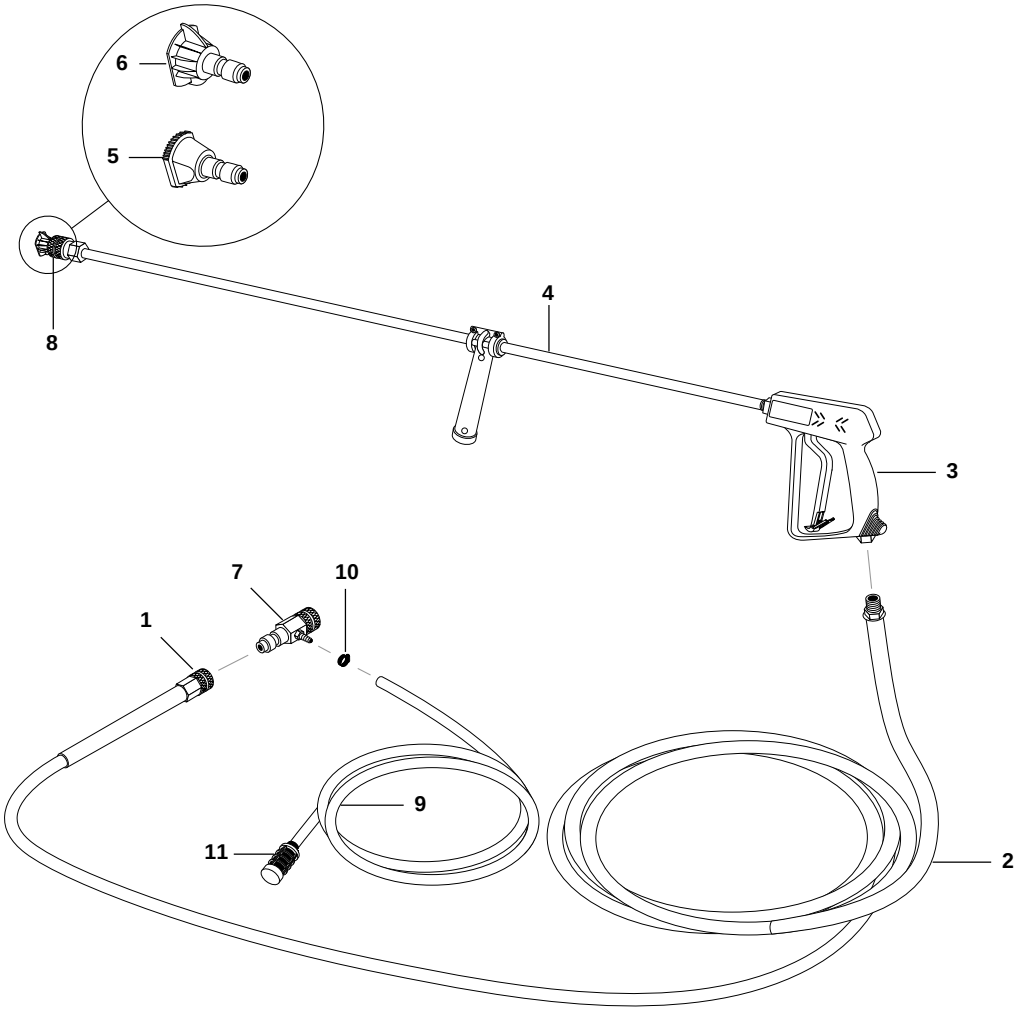

HOSE & SPRAY GUN ASSEMBLY PARTS LIST

ITEM	PART NO.	DESCRIPTION	QTY
1	2-2002	Coupler, 3/8" Female	1
	2-0121	Quick Coupler O-Ring	1
2	4-02093450BC	Hose 3/8" x 50', 1 Wire Blue w/Coupler (CB)	1
3	4-01246	Spray Gun	1
4	4-0110322	Wand w/Side grip	1
5	4-16540	Nozzle, Soap, Brass	1
6	Nozzle, See Exploded View Parts List		

ITEM	PART NO.	DESCRIPTION	QTY
7	3-12021	Injector, Chemical Adj., 3-5 GPM 0.083	1
8	2-2000	Coupler, 1/4" Female	1
	2-0119	Quick Coupler O-Ring	1
9	4-02080000	Tube, 1/4" x 1/2" Clear Vinyl	6 ft.
10	2-9040	Clamp, Hose	2
11	2-1904	Strainer	1

SPECIFICATIONS

Model	Nozzle Size	Pump	Pump Part No.	Unloader Part No.	Pump Pulley	Pump Pulley Part No.	Pump Bushing	Bushing Part No.	Motor Size	Motor Voltage/ph	Motor Hz
301001D	5.5	T991	5-23020	5-3208	AK74H	5-40107401	24MM	5-512024	2HP	120V/1PH	60
402007A	06	GM4035HR	5-1922	5-3208	2AK74H	5-40207401	24MM	5-512024	6.2HP	230V/1PH	60
402007B	06	GM4035HR	5-1922	5-3208	2AK74H	5-40207401	24MM	5-512024	6.2HP	230V/3PH	60
402007C	06	GM4035HR	5-1922	5-3208	2AK74H	5-40207401	24MM	5-512024	6.2HP	460V/3PH	60
402007G	06	GM4035HR	5-1922	5-3208	2AK74H	5-40207401	24MM	5-512024	6.2HP	208V/1PH	60
402007H	06	GM4035HR	5-1922	5-3208	2AK74H	5-40207401	24MM	5-512024	6.2HP	208V/3PH	60
353007A	04	GM4035HR	5-1922	5-3208	2BK80H	5-40508001	24MM	5-512024	7.5HP	230V/1PH	60
353007B	04	GM4035HR	5-1922	5-3208	2BK80H	5-40508001	24MM	5-512024	7.5HP	230V/3PH	60
353007C	04	GM4035HR	5-1922	5-3208	2BK80H	5-40508001	24MM	5-512024	7.5HP	460V/3PH	60
353007G	04	GM4035HR	5-1922	5-3208	2BK80H	5-40508001	24MM	5-512024	7.5HP	208V/1PH	60
353007H	04	GM4035HR	5-1922	5-3208	2BK80H	5-40508001	24MM	5-512024	7.5HP	208V/3PH	60

SPECIFICATIONS

Model	Motor Part No.	Pulley Pulley	Motor Part No.	Bushing Bushing	Belt Part No.	Belt Size	Contactor Part No.	Part No.	Overload Part No.	Transformer Part No.
3010D	5-1047	AK25x5/8	5-40102558	N/A	N/A	AX37 (1)	5-602037	6-4031	N/A	N/A
4020A	5-10401	2AK56H	5-40205601	HX1-1/8"	5-511113	AX42 (2)	5-602042	6-4018	N/A	6-60101
4020B	5-1011	2AK56H	5-40205601	HX1-1/8"	5-511113	AX42 (2)	5-602042	6-4010	6-5012	6-60101
4020C	5-1011	2AK56H	5-40205601	HX1-1/8"	5-511113	AX42 (2)	5-602042	6-4004	6-5010	6-60101
4020G	5-10402	2AK56H	5-40205601	HX1-1/8"	5-511138	AX42 (2)	5-602042	6-4018	6-5013	6-60141
4020H	5-10111	2AK56H	5-40205601	HX1-1/8"	5-511138	AX42 (2)	5-602042	6-4013	6-5011	6-60141
3530A	5-1013	2BK52H	5-40505201	HX1-3/8"	5-511138	BX43 (2)	5-604043	6-4018	6-5015	6-60101
3530B	5-10145	2BK52H	5-40505201	HX1-3/8"	5-511138	BX43 (2)	5-604043	6-4010	6-5011	6-60101
3530C	5-10145	2BK52H	5-40505201	HX1-3/8"	5-511138	BX43 (2)	5-604043	6-4004	6-5009	6-60101
3530G	5-10131	2BK52H	5-40505201	HX1-3/8"	5-511138	BX43 (2)	5-604043	6-4021	6-5015	6-60141
3530H	5-10144	2BK52H	5-40505201	HX1-3/8"	5-511138	BX43 (2)	5-604043	6-4013	6-5013	6-60141

MULTI-ROOM INSTALLATION

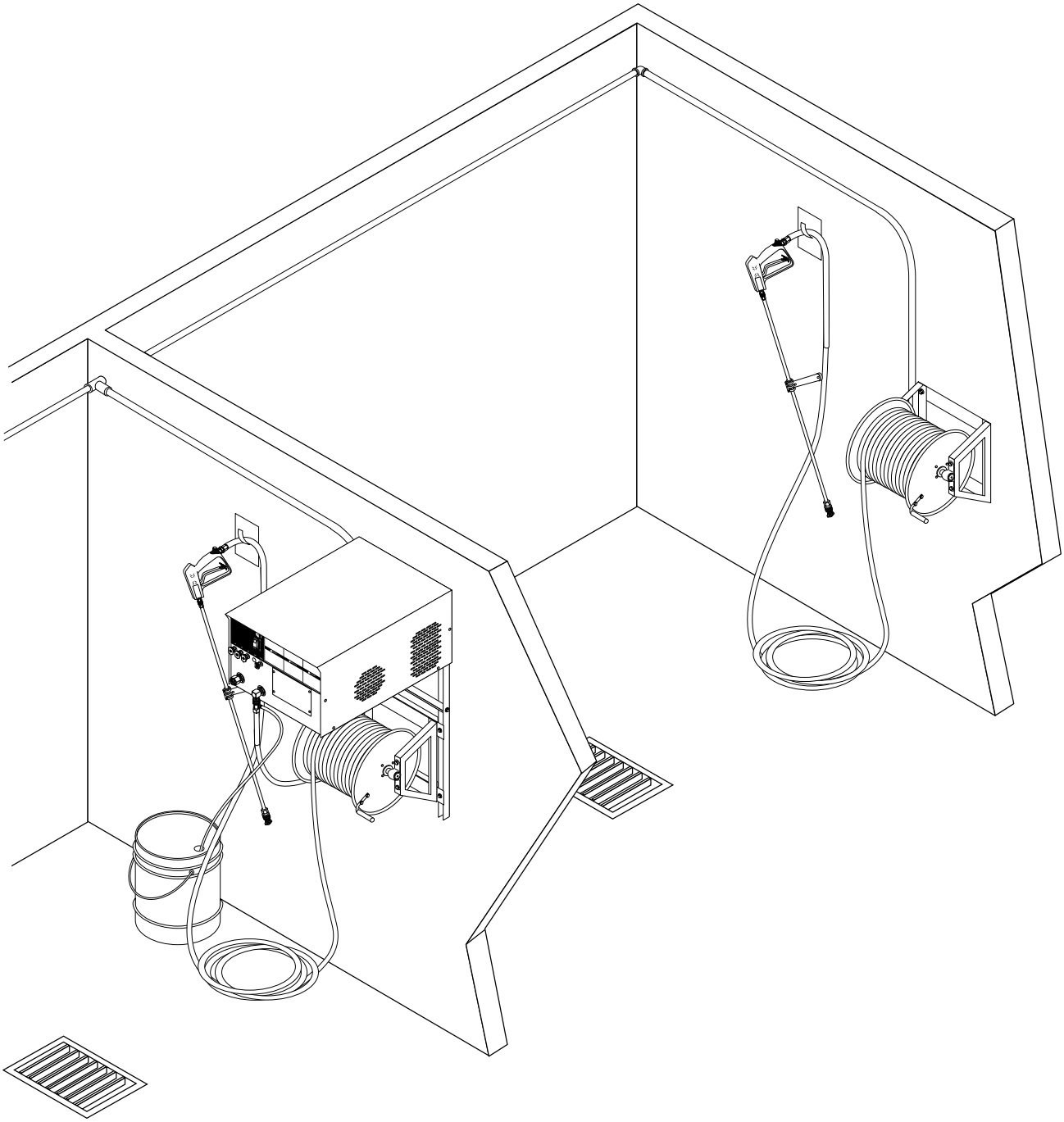

SHARK LIMITED NEW PRODUCT WARRANTY
PRESSURE WASHERS

WHAT THIS WARRANTY COVERS

All SHARK PRESSURE WASHERS are warranted by SHARK to the original purchaser to be free from defects in materials and workmanship under normal use, for the periods specified below. This Limited Warranty is subject to the exclusions shown below, is calculated from the date of the original purchase, and applies to the original components only. Any parts replaced under this warranty will assume the remainder of the part's warranty period. This warranty applies to the original purchaser and is not transferable.

LIMITED LIFETIME PARTS WARRANTY:

Components manufactured by SHARK, such as frames, handles, and belt guards. Forged brass pump manifold. All heating coils will have a three year warranty. Internal components (excluding oil seals) on the oil-end of all pressure washer pumps will have a seven year warranty.

ONE YEAR PARTS WARRANTY:

All other components, excluding normal wear items as described below, will be warranted for one year on parts. Warranty on these parts will be for one year regardless of the duration of the original component manufacturer's part warranty.

WARRANTY PROVIDED BY OTHER MANUFACTURERS:

Motors, generators, and engines, which are warranted by their respective manufacturers, are serviced through these manufacturers' local authorized service centers. SHARK cannot provide warranty on these items.

WHAT THIS WARRANTY DOES NOT COVER

This warranty does not cover the following items:

1. Normal wear items, such as nozzles, guns, discharge hoses, wands, quick couplers, seals, filters, gaskets, O-rings, packings, pistons, pump valve assemblies, strainers, belts, brushes, rupture disks, fuses, pump protectors.
2. Damage or malfunctions resulting from accidents, abuse, modifications, alterations, incorrect installation, improper servicing, failure to follow manufacturer's maintenance instructions, or use of the equipment beyond its stated usage specifications as contained in the operator's manual.
3. Damage due to freezing, chemical deterioration, scale buildup, rust, corrosion, or thermal expansion.
4. Damage to components from fluctuations in electrical or water supply.
5. Normal maintenance service, including adjustments, fuel system cleaning, and clearing of obstructions.
6. Transportation to service center, shop labor charges, field labor charges, or freight damage.

WHAT YOU MUST DO TO OBTAIN WARRANTY SERVICE

While not required for warranty service, we request that you register your SHARK pressure washer by returning the completed registration card. In order to obtain warranty service on items, you must return the product to an Authorized SHARK Dealer, freight prepaid, with proof of purchase, within the applicable warranty period. If the product is permanently installed, you must notify your Authorized SHARK Dealer of the defect. The Authorized Dealer will file a claim, which must subsequently verify the defect. In most cases, the part must be returned to SHARK freight prepaid with the claim. For warranty service on components warranted by other manufacturers, the Authorized Dealer can help you obtain warranty service through these manufacturers' local authorized service centers.

LIMITATION OF LIABILITY

SHARK'S liability for special, incidental, or consequential damages is expressly disclaimed. In no event shall SHARK'S liability exceed the purchase price of the product in question. SHARK makes every effort to ensure that all illustrations and specifications are correct, however, these do not imply a warranty that the product is merchantable or fit for a particular purpose, or that the product will actually conform to the illustrations and specifications. **THE WARRANTY CONTAINED HEREIN IS IN LIEU OF ALL OTHER WARRANTIES, EXPRESS OR IMPLIED, INCLUDING ANY IMPLIED WARRANTY OF FITNESS FOR A PARTICULAR PURPOSE.** SHARK does not authorize any other party, including authorized Dealers, to make any representation or promise on behalf of SHARK, or to modify the terms, conditions, or limitations in any way. It is the buyer's responsibility to ensure that the installation and use of SHARK products conforms to local codes. While SHARK attempts to assure that its products meet national codes, it cannot be responsible for how the customer chooses to use or install the product.

SHARK PRESSURE WASHERS
1-800-771-1881 • www.shark-pw.com

Shark®
Pressure Washers

Form #97-714 • Revised 4/05 • Printed in U.S.A.